惠而浦

WHIRLPOOL REFRESH SS107 DEHUMIDIFIER
惠而浦 REFRESH SS107抽濕機

OWNER'S INSTRUCTIONS 使用說明

Before operating the unit, please read this manual thoroughly, and retain for future reference.

操作前，請先仔細閱讀本説明書，並請妥善保存，以備日後參考之用。

DEHUMIDIFIER SAFETY

Various symbols are used throughout this manual and on the product to alert you to measures for safe use.
These symbols are classified according to the seriousness of the risk of ignoring them, and are explained below.

Your safety and that of others is very important

We have shown a number of important safety tips in this manual and on your appliance. Always read and observe these safety tips.

This is the safety alert symbol.
This alerts you to potential hazards that could kill or injure you or others.
These safety tips follow the safety alert symbol and the word 'DANGER' or 'WARNING.' The meaning of these words is:

DANGER Danger of death or serious injury if you don't immediately follow these instructions.

WARNING Danger of death or serious injury if you don't follow these instructions.

All safety tips inform you what the potential hazard is, how to minimise the chance of injury, and what may happen if the instructions are not followed.

IMPORTANT SAFETY INSTRUCTIONS

WARNING: To reduce the risk of fire, electric shock, injury or disability caused by the appliance, follow these basic precautions:

- Plug into an earthed 3-pin socket.
- Do not use adapters.
- Unplug before servicing.
- Do not remove earth pin.
- Do not use extensions.
- Do not drink the accumulated water.

READ AND KEEP THESE INSTRUCTIONS.

CAUTION

Check that the room where the unit is to operate is not too small. When its compressor overheats, it cuts out automatically to prevent accidents. Should this happen, unplug the appliance, rectify the problem, wait for about 45 minutes and then restart the unit.

MAINTENANCE

Replacing the deodorising charcoal filter

1. Switch unit off and remove filter from the back.
2. Do not wash deodorising charcoal filter (2). It should be replaced after 3 to 6 months' use.
3. Contact your dealer to obtain new filters.

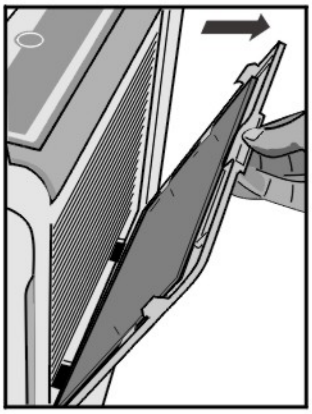

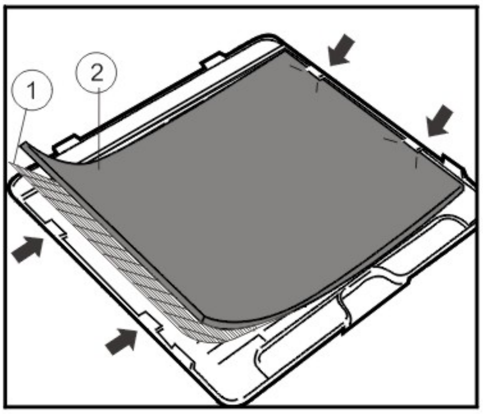

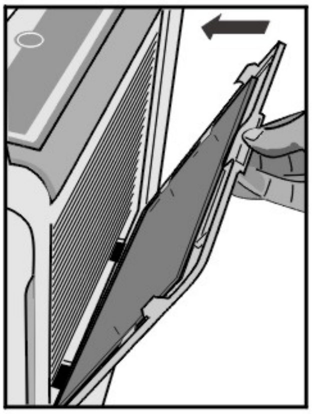

(1) Nano-silver pre-filter
(2) Deodorising charcoal filter

Cleaning the Nano-silver pre-filter

If the filter is caked with dust, airflow and unit performance are compromised. Check and clean the filter every two weeks to prevent this.

1. Switch unit off and remove filter.
2. The nano-silver pre-filter (1) can be washed and wiped gently.
3. Replace filter.

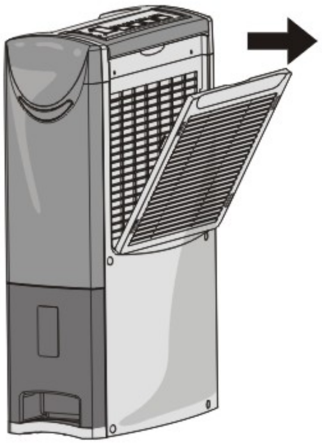

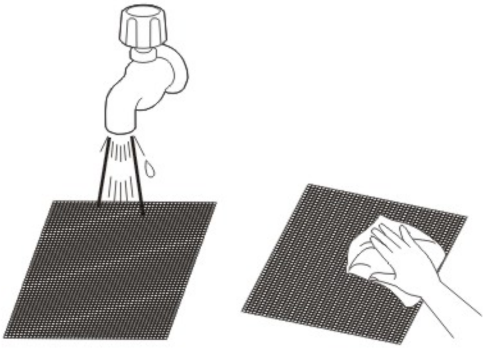

Cleaning the nano-silver pre-filter (1)

MAINTENANCE

Cleaning the unit

1. Switch off and unplug.
2. Clean air intake and outlet with a soft cloth. Dust tends to accumulate here.
3. Do not use petrol or solvents.
4. Clean the surface with a soft damp cloth, using only water or mild detergent.
5. Wipe dry with a dry cloth.

NOTE: Never use water to wash the unit.

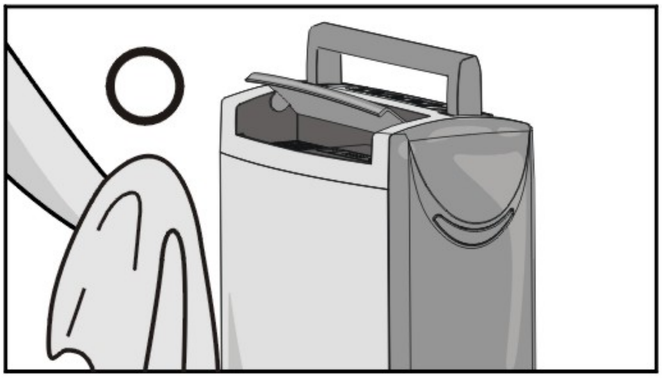

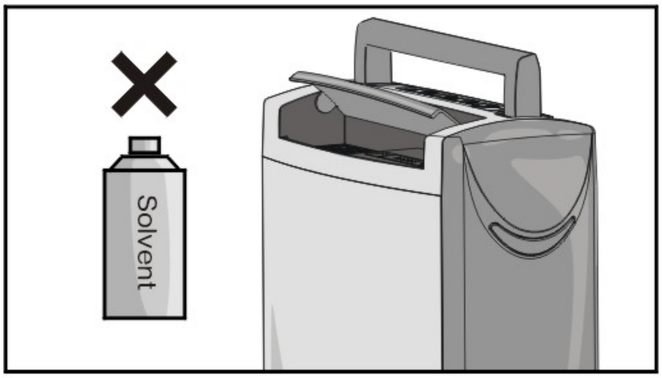

Preparing for storage

1. Run the unit in air filter mode for at least an hour to dry the inside.
2. Switch off and unplug.
3. Clean and dry the bucket.
4. Cover the unit to prevent dust accumulation. Store horizontally (I think you mean 'vertically') in a cool, dry place. Do not expose to direct sunlight.

PROBLEM SOLVING

Normal conditions

The compressor is set to continue running for at least three minutes after the unit switches off so as to ensure the next use is smooth. Therefore ensure the power is left on during this time. This action also extends the working life of the unit.

Troubleshooting

A: Before phoning for service please check the following:

1. If the unit fails to operate:
   - Is 'FULL' flashing? Is the bucket in a stable location? Check and reposition.
   - Is the unit plugged in?
   - Is it switched on?
   - Is the unit defrosting ('Defrost' flashing)?
2. If performance is inefficient:
   - Check if the filter is dirty and clean it.
   - Check that air intake and outlet are uncovered.
   - In case of low ambient temperature and humidity the unit defrosts often.
3. If noise is heard:
   - Is the unit on a horizontal surface? Check and move if necessary.
   - Check if the filter is dirty and clean it.

B. If the problem persists (for example indicator lights flashing on the panel prevent operation and indicate the appliance has identified a fault), unplug the unit and contact the manufacturer.

C. Do not attempt to carry out repairs by yourself.

D. Do not operate the unit if the cable or plug is damaged, but take it to a qualified technician. Unauthorised repairs may damage the unit or cause injury to persons and damage to property, and the guarantee is invalidated.

After-sales service center

Consumer Appliances Service Limited
14/FL. Wilson Logistics Centre, 24-28 Kung Yip St, Kwai Chung, N.T. Hong Kong.
Star Hotline: 24069138

Whirlpool 惠而浦

DEHUMIDIFIER SAFETY

⊗ Actions to be strictly avoided. ✓ Actions you must take.

- Be sure to read through the safety instructions before first using this unit. Keep this manual available for easy reference.

⚠Danger

⊗ **Do not use mains voltage other than the specified 220-240V 50Hz.**
Using the unit at any other voltage may cause electric shock or fire.

⊗ **Do not modify the mains cable or damage it in any way.**
Handle with care and do not damage, bend, pull, twist, wrap or heat it, place heavy objects on it or pinch it between objects. The resulting damage may cause electric shock or fire.

⊗ **Do not switch off by pulling on the mains cable or plug.**
This may cause electric shock or fire.

⊗ **Do not insert fingers or foreign objects such as pins, wire or sticks into the air intake or outlet.**
The unit has a fast rotator fan, so hands or foreign objects may cause injury, electric shock and damage to the unit.

⊗ **Do not place aerosols or other hazardous materials in the vicinity.**
Also do not place inflammable materials such as petrol or thinner nearby. These may explode and cause fire.

✓ **Keep the fragrance box out of reach from small children.**

⊗ **Do not place the unit near a hear source.**
This may cause the resin inside to melt and catch fire.

⊗ **Do not modify the unit. It should not be disassembled or repaired by persons other than a qualified technician.**
This may cause fire, electric shock or injury.

⊗ **If you notice anything abnormal, such as a smell of burning, switch off, unplug and consult the after-sales service centre.**
Using the unit despite abnormalities may cause breakdown, electric shock or fire.

✓ **If repair is needed, please refer to the after-sales service centre.**
Otherwise this may cause fire, electric shock or injury.

✓ **Before plugging in at the mains, ensure the plug is not dusty.**
Dust the plug regularly with a dry cloth, because dust prevents proper connection. This may cause electric shock or fire.

✓ **A damaged mains cable must be replaced by the manufacturer, his service agent or qualified technicians to prevent danger.**

⚠Warning

✓ **For continuous water draining be careful not to bend the hose and to position its nozzle below the unit.**
Otherwise water may spill and damage household effects.

✓ **Operate the unit only on level, stable surfaces.**
An uneven surface may cause stored water to spill and damage household effects or cause electric shock, short circuit or fire.

DEHUMIDIFIER SAFETY

⚠Warning

- Do not use a drain hose in an ambient temperature of less than 0°C.
  This would cause water in the hose to freeze and water in the unit to leak and damage household effects.
- Ensure water tank is empty before moving the unit.
  This would cause water in the unit to leak and damage household effects and cause electric shock, short circuit or fire.
- Always allow a gap of 5-10cm around the unit.
  Insufficient ventilation may cause overheating or fire.
- Do not move the unit on its castors on an uneven surface.
  Lifting the unit instead prevents damage to castors and floor. This advice also applies to thick-pile carpets, because the castors may leave marks.
- Do not topple or drop the unit or ever put it on its side.
  This might damage it or cause a leak or short circuit.
- Do not operate in a cupboard or in any narrow or confined space.
  Insufficient ventilation may cause overheating or fire.
- Do not place any water container such as a vase on the unit.
  Water spillage may impair insulation and cause electric shock, short circuit or fire.
- The unit is for indoor use only. Do not use in locations without shelter or exposed to direct sunlight.
  This may cause overheating, electric shock, short circuit or fire.
- Do not use the unit to control ambient temperature for storage---for instance for artworks or books.
  Doing this may cause deterioration of the objects.
- Regularly inspect any unit used continuously or for long periods.
  Otherwise overheating or short circuit may result.
- If the unit is operated in the same position for some time, you should check for dirt under and around it.
  Move the unit intermittently and clean the floor under it.
- If not using the unit for some time, ensure it is safely unplugged.
  Otherwise electric shock or fire may result.
- Do not use the drain water for humans or pets to drink.
  It may be harmful to health.
- Do not stand on or lean against the unit.
  This may cause it to fall over, resulting in personal injury.
- Do not place in the vicinity of a burner such as a stove.
  This may prevent proper heating.
- Do not obstruct air intake or outlet with clothing or anything else.
  Obstruction of the airflow causes overheating, malfunction or fire.
- Do not use the unit above floor level, for instance on a table.
  This might cause the unit to fall, resulting in personal injury or damage to the unit.
- Do not wash with water.
  This might cause electric shock.
- Do not wash with water.
  This might cause electric shock, short circuit or fire.

PRODUCT SPECIFICATIONS

Features

1. Unique air purifying function
   - The unit contains a nano-silver pre-filter and a deodorising charcoal filter.
   - It operates as dehumidifier and air purifier simultaneously or simply as an air purifier.
2. Highly efficient drying and dehumidifying
   - The louver can be adjusted to bring dry air to where you need. Automatic louver is available for option.
   - The rear air intake reclaims circulated air and makes for highly efficient drying.
3. Three running modes and two water level indicators
   - Dryer, air purifier and dehumidifier modes to choose from.
   - Two water level indicators enable easy checking of water level.
4. Movable and compact
   - Compact design with retractable handle makes lifting easy.
   - Its slim shape enables storage in laundry room or other confined space.
5. Automatic defrost
   - Auto defrost ensures proper operation above 5°C.
6. Fragrance box provided
   - A fragrance box mounted near the air outlet is capable of storing fragrance materials to scent your room or work place, affect your mood, alleviate fatigue, reduce anxiety or promote relaxation.

Specifications

Model : SS107

- Microchip Control
- Dehumidification Capacity: 10 liters per day (30°C, 80%RH).
- Voltage: 220-240V, 50Hz.
- Auto defrost, and auto stop when bucket is full
- Ambient temperatures: 5°C~35°C
- Dimensions in mm: 170W x 324D x 522H
- Net weight : 8kg

Dimensions (mm)

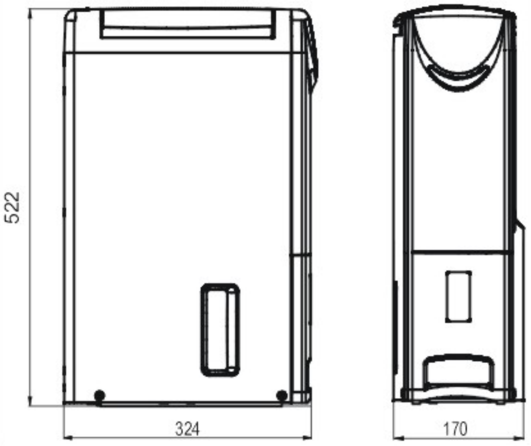

POSITIONING THE UNIT

1. Place upright on a stable, flat surface to prevent leakage.

2. Position at a safe distance from walls and furniture (see diagram on right).

3. Laundry should be kept at least 40cm from the unit to prevent dripping.

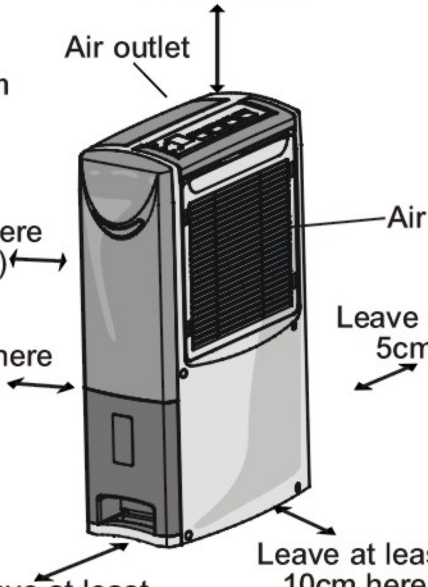

SAFE OPERATION

Do not insert small objects,which cause damage and danger.

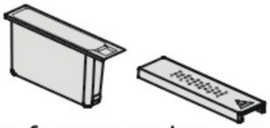

The fragrance box can be released from the machine for refilling aromatic chemicals or scented materials. When using fragrance liquid, such as essential oil, please drip several drops into the sponge prepared in the box. Never fill it too much to overflow. Replace the fragrance box firmly in place to prevent access by infants. Keep the fragrance box out of reach from small children.

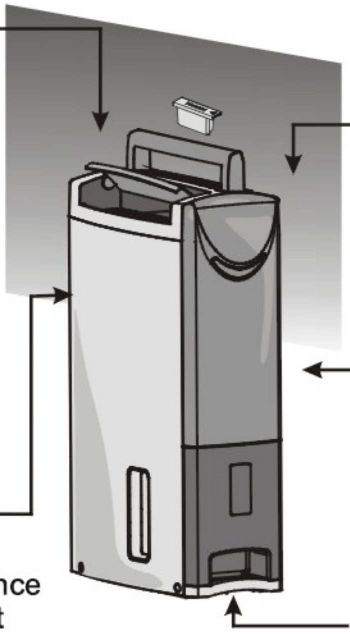

Leave an appropriate gap as above

Do not remove bucket during operation—this causes leaks.

Fit bucket properly. Improper fitting or full bucket causes 'Full' to illuminate and stops the unit.

HOW TO OPERATE

Before using

1. Installing nano-silver pre-filter and deodorising charcoal filter.

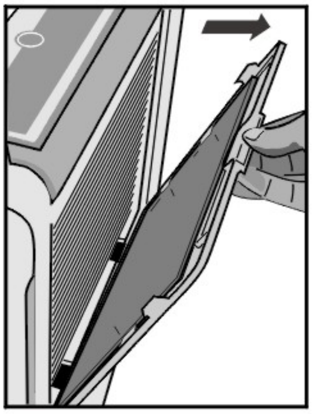

Remove filter frame
from the back

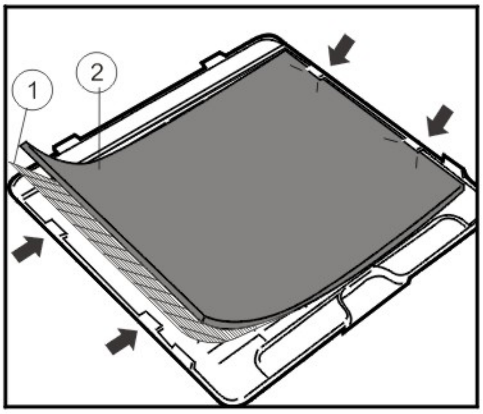

Unpack nano-silver pre-filter and
deodorising charcoal filter and fit
as illustrated

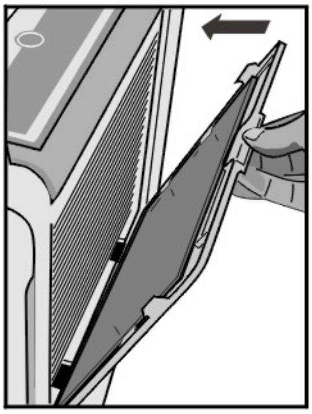

Re-install frame

2. Open the louver

Open the louver before operating the unit. The louver can be adjusted forward or upward.

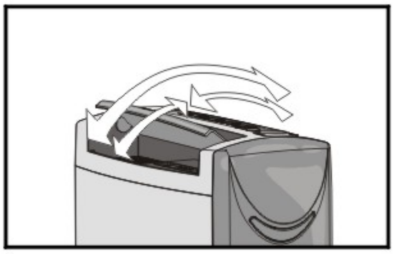

3. Bucket must be properly fitted

When bucket is full or not inserted,'Full' (water indicator light) illuminates and stops the unit.

Continuous draining is covered on the page 9.

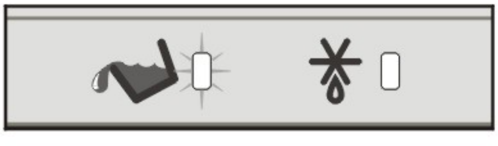

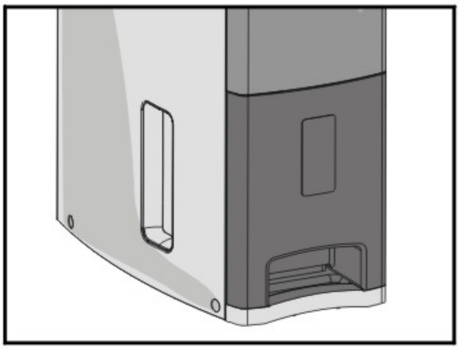

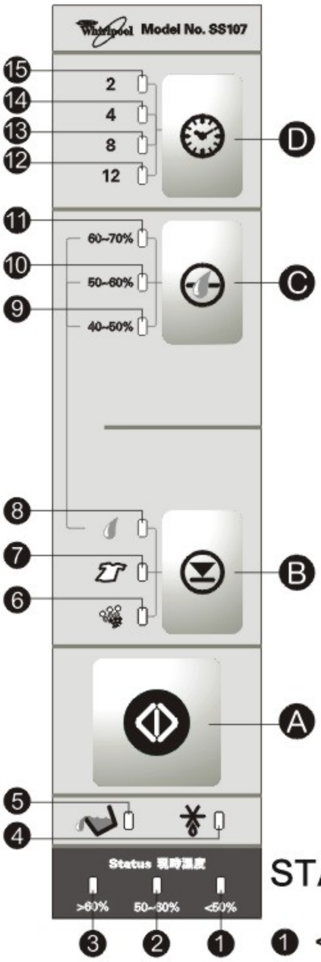

1. Plug into the mains. Press ON/OFF key Ⓐ to start.
2. Press FUNCTION key Ⓑ to activate functions ❽❼❻ .
3. Press HUMIDITY key Ⓒ to set target humidity with indicators ⓫❿❾ . Only operates in dehumidifier function.
4. Press TIMER key Ⓓ to illuminate indicators ⓯⓮⓭⓬ . If these lights do not illuminate, continuous dehumidifying is in progress.
5. Press ON/OFF key Ⓐ again to switch off (unplug the unit if it is not to be used for some time).

Note: The compressor is programmed for protection, so it will not restart within 3 minutes of stopping.

Function keys

Ⓐ ON/OFF key　　Ⓑ FUNCTION key

Ⓒ HUMIDITY key　　Ⓓ TIMER key

STATUS Indicators

❶ <50%: room humidity is generally below 50%.
❷ 50-60%: room humidity is generally 50-60%.
❸ >60%: room humidity is generally above 60%.
❹ : flashes when defrosting, returns automatically to dehumidifer.
❺ : flashes when bucket is full or wrongly positioned; please empty or reposition.
❻ : the unit is filtering with no dehumidifier.
❼ : the unit is producing heated air for rapid drying of laundry.
❽ : flashes when dehumidifier is on.
❾ 40-50%: the unit stops automatically when humidity reaches 40-50%.
❿ 50-60%: the unit stops automatically when humidity reaches 50-60%.
⓫ 60-70%: the unit stops automatically when humidity reaches 60-70%.
⓬ 12 hours: the unit stops automatically after 12 hours.
⓭ 8 hours: the unit stops automatically after 8 hours.
⓮ 4 hours: the unit stops automatically after 4 hours.
⓯ 2 hours: the unit stops automatically after 2 hours.

NOTE

Emptying the bucket

1. When the bucket is full, the unit stops and 'Full' light flashes.
2. Remove bucket by pulling out and lifting carefully.
3. Empty water, clean bucket and replace.
4. Do not remove the bucket too soon, as the unit may still be dripping.
5. Do not remove or damage the float in the bucket, as this prevents proper operation.
6. The 'Full' light illuminates if the bucket is incorrectly positioned.

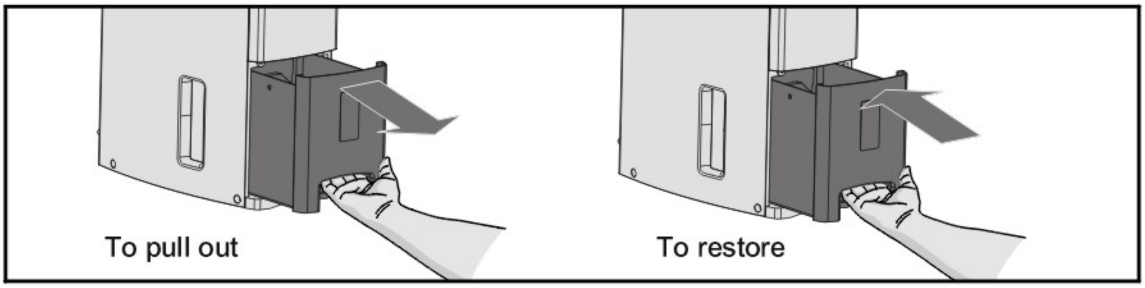

Draining

You may use a pipe with inner diameter of 11.5-12mm for continuous draining:

1. Remove the hole covering at the back with a screwdriver, pass pipe through hole and connect to outlet nozzle.
2. Ensure the pipe to the drain has no kinks.

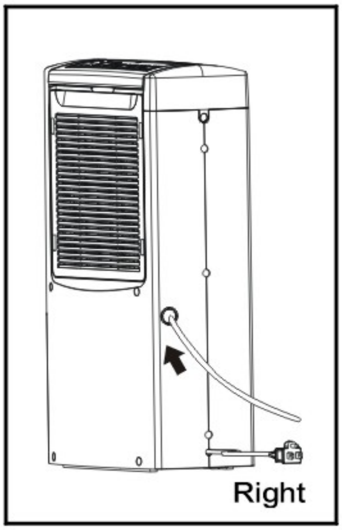

Moving

1. Use the retractable handle and keep the unit as upright as possible, never on its side.
2. Unplug unit and empty water bucket before moving.
3. Before switching on check bucket positioning.

安全注意事項

本用戶手冊及抽濕機已附加各種警告標記，以提醒用戶在使用時，應注意的安全事項。這些標記是根據錯誤使用所產生的危險程度而分類，請仔細閱讀及參照下文的解釋。

使用安全與注意事項

在本說明書和產品機身上，我們提供了許多重要的安全訊息。請細閱並且遵守這些安全訊息。

這是安全警告標記。
這個標記表示會造成死亡或人身傷害，和具有其他潛在危險。
所有安全訊息和安全警告標記，會加上 " 危險 " 或 " 警告 " 字眼。這些字眼代表以下意思：

⚠危 險 若沒有立即根據以下指示，你可能會有死亡或嚴重受傷的危險。

⚠警 告 若沒有根據以下指示，你可能會有死亡或嚴重受傷的危險。

所有安全訊息會解釋甚麼是潛在危險，並告訴你應如何能減少受傷的機會，以及告訴你如果沒有根據安全指示，會有甚麼後果。

重要安全事項

警告：如要減少火災、觸電、人身傷害或疾病，當使用本抽濕機時，請遵守基本的預防措施：

- 插進有地線的三孔電源插座。
- 在進行維修前，請拔掉插頭。
- 切勿使用電線拖板。
- 切勿使用萬能插蘇。
- 切勿移除有地線的插腳。
- 切勿飲用在水桶內的水。

請妥善保管以備將來參考之用

⚠ 使用注意

請檢查房間尺寸，查看抽濕機是否有足夠的抽濕能力。當壓縮機變得異常燙熱時，壓縮機會自動停止操作以防意外發生。如出現過熱情況，請把插頭從電源插座拔出，並等待約45分鐘，然後再次操作本產品。

保養須知

更換除臭活性碳濾網

1. 關閉抽濕機並在機背拉出濾網。
2. 切勿用水沖洗除臭活性碳濾網(2)，我們建議使用3～6個月後，便須更換濾網。
3. 如須購買活性碳濾網，請與售後服務部聯絡。

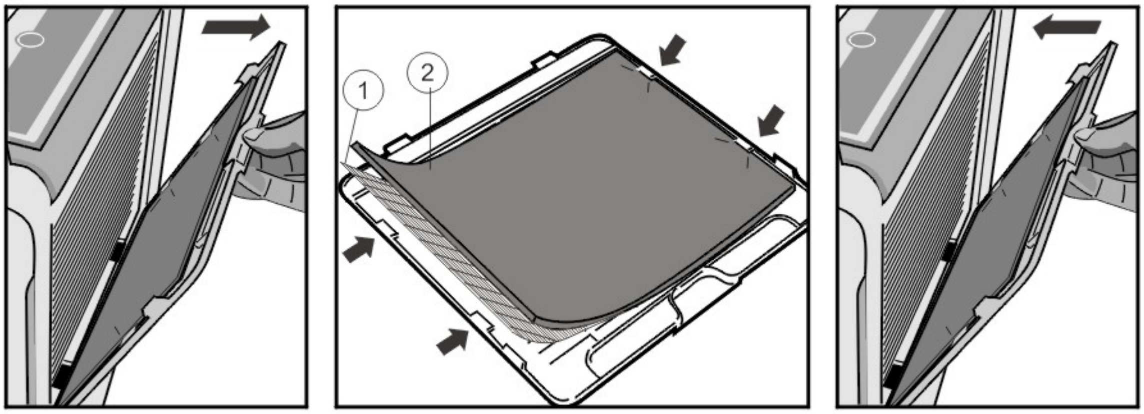

(1) 納米銀濾網
(2) 除臭活性碳濾網

清潔納米銀濾網

如濾網上附有過多的灰塵，出風量會減少並影響除濕和乾衣能力，故此，請每兩星期檢查並清洗濾網一次。

1. 首先關閉電源，從機背取出濾網。
2. 納米銀濾網(1)可用水沖洗，然後用軟布抹乾。
3. 清潔完畢請將濾網裝回原位。

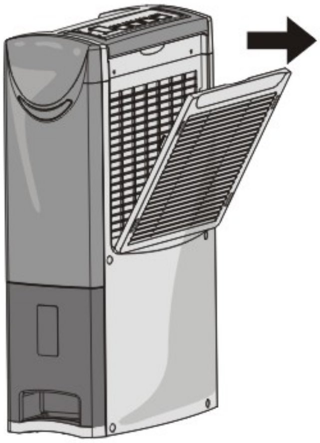

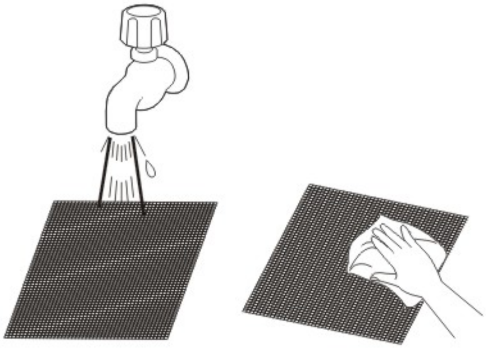

清潔奈米銀濾網(1)

保養須知

清潔機殼

1. 請關閉電源，然後拔出插頭。
2. 使用軟布清潔出風口及入風口，因該處較容易積聚灰塵。
3. 切勿使用電油或其它溶劑清潔，以免損毀機身表面。
4. 請用較柔性的清潔劑，並用軟布沾水擦拭機殼。
5. 清潔後，再用乾布抹乾機殼。

注意：清潔時切勿直接用水沖洗，以免機器內部進水，發生故障。

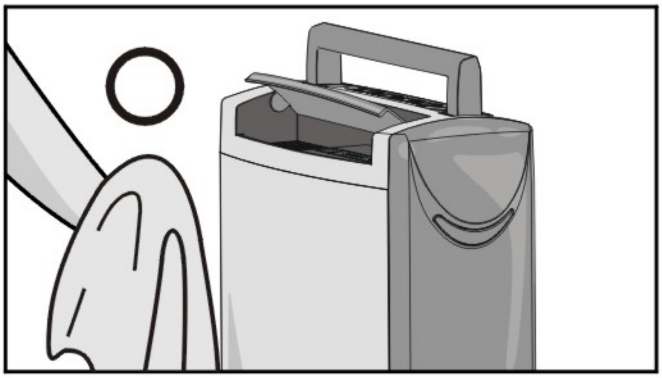

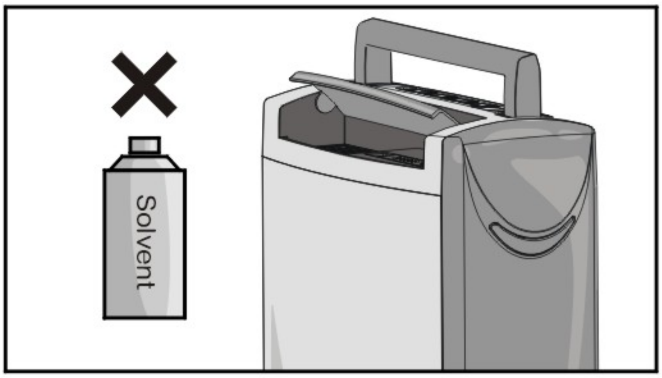

貯存前須知

1. 請先用空氣淨化模式運轉最少1小時，以吹乾機器內部。
2. 然後關機，拔掉插頭。
3. 將水箱內的水倒掉，並擦拭乾淨。
4. 在機殼蓋上防塵套，將抽濕機收藏在陰涼、通風的地方，切勿受陽光直射。

疑難排除

正常情形

本機產品的壓縮機具有運轉保護功能，運作停止後或剛開機三分鐘內，不會啟動，以延長壓縮機壽命。

疑難排除

A、致電維修部時，請先檢查下列各項：

1. 本機無法操作：
   - 水滿指示燈是否閃動？水箱是否正確裝入？請取出水箱並重新安放原位。
   - 插頭是否鬆脫？
   - 有否啟動電源？
   - 是否正在除霜（除霜指示燈正在閃爍）？
2. 性能不佳：
   - 過濾網是否骯髒？請進行清潔。
   - 出風口及入風口是否阻塞？
   - 室內溫度、濕度是否太低（經常除霜）？
3. 噪音太大時：
   - 是否水平放置本機？請將抽濕機移去較平坦的位置。
   - 濾網是否骯髒，請進行清潔。

B、檢查以上事項後，情況仍無法改善時（例如當控制面板上有數個指示燈閃動且本機無法正常操作時，可能是自我診斷功能，發現故障所致），請關閉電源，通知本公司進行維修。

C、切勿自行拆開機殼，進行維修。

D、若電源線或插頭損壞時，切勿自行更換及操作本機，必須由製造商、維修部或認可合資格人員更換以免發生危險。

售後服務中心

客戶電器維修有限公司
香港葵涌工業街24-28號威信物流中心14字樓
星級顧客查詢熱線：2406 9138

Whirlpool 惠而浦

安全注意事項

⊗ 表示絕對禁止進行　　⊘ 表示必須要做到的事項

● 使用本抽濕機前，請仔細閱讀“安全注意事項”，並將本說明書妥善保存以便隨時參閱。

⚠ 危 險

⊗ 本機只適用於220-240V. 50Hz的電源，使用其它電壓，可造成觸電或火災的危險。

⊗ 切勿改裝電源線或令其受損。
小心使用電源線，避免用力扭曲，拉扯，綑扎或加熱電源線，同時避免將重物放在其上，及放在容易絆腳的物件之間，否則電源線可能會損壞，導致觸電或火災危險。

⊗ 切勿用力拉扯電源線以拔出插頭。
否則會造成觸電或火災危險。

⊗ 切勿將手指或外物(大頭針、金屬線、木棒)等插入出風口或入風口。
由於機內的風扇以高速轉動，切勿將手放進機內以避免受傷、觸電及損壞機件。

⊗ 切勿將噴霧劑或危險物品靠近本抽濕機。
亦不可將易燃物品(汽油、稀釋劑)，放近本機使用，否則可能會造成火災或爆炸危險。

⊘ 請勿讓小孩單獨接觸香薰盒。

⊗ 切勿將本產品放于發熱源頭附近。
否則，產品的樹脂物料會熔化，並會造成火災的危險。

⊗ 切勿對本產品進行改裝。
嚴禁由非認可的維修人員，對本產品進行分解或維修。否則可能導致火災、觸電或人身傷害的危險。

⊗ 當發生任何不正常情況時，(如產生燒焦味)，應立即停止操作本產品，並拔出電源插頭，以及向本公司維修部進行查詢。
若不加理會而繼續操作，可導致故障、觸電或火災等危險。

⊘ 如須要維修，請聯絡售後服務中心，若自行修理，可能造成火災、觸電或人身傷害等危險。

⊘ 請確保電源插頭上沒有灰塵積聚後，才將插頭插入電源插座內。
請定期使用乾布，抹去電源插頭上的灰塵。插頭上的灰塵，會導致接觸不良，可能會引起觸電或火災等危險。

⊘ 若電源線損毀，必須由生產商、維修代理或合資格的人士修理以避免意外發生。

⚠ 警 告

⊘ 如要進行連續排水，切勿扭曲排水管，並確保排水口位於本機之下。

⊘ 必須在平坦及穩定的位置上操作本產品。
不平坦的位置會使機內積水流出，浸濕傢具或出現過熱或短路等現象。

安全注意事項

⚠ 警 告

⊘ **當使用排水管時，周圍的溫度不可低於零度。**
否則排水管內的水可能結冰，導致機內積水外流，浸濕傢具或損毀電器。

⊘ **移動本機前，必須停止操作，並把水箱內的水倒空。**
否則，機內積水外流，不但會浸濕傢具，還會導致觸電、短路或火災等危險。

⊘ **請在本機周圍最少留下5-10厘米的空間。**
通風不良可能會造成過熱或火災等危險。

⊗ **切勿使用輪子將本產品放在不平坦的地面上移動。**
在不平坦的地面上移動本機時，請把本機抬起，避免損壞滑輪或地板。在厚地毯上移動時本產品時，需抬起本機，否則滑輪可能會在地板或地毯上留下痕跡。

⊗ **切勿令機身翻倒或使其掉落。**
切勿在機身一側儲存物品或用力移動。這可能會損壞本機或導致漏水和短路等情況。

⊗ **切勿在衣帽間內或傢具之間等狹窄不通風的地方，操作本產品。**
若通風不良，可導致抽濕機發熱或火災等危險。

⊗ **切勿將花瓶等裝有水的容器，放在機身上面。**
若不慎將水倒入機內，會降低電器絕緣性能，導致觸電、短路或火災等危險。

⊗ **本產品只限於室內使用。**
本產品不可被陽光直射，或在沒有遮蓋的地方使用。否則，可導致觸電、短路或火災等危險。

⊗ **切勿將本產品儲存一些須要恆溫保存的物品如藝術珍品或學術資料等。**
否則，可能損壞收藏物品的質量。

⊘ **如連續及長時間使用本產品，應定期進行檢查。**
否則，可導致本產品出現過熱或短路等情況。

⊘ **當在同一位置長期使用本產品時，請清除本機底部及機身的污垢。**
請間中移動本機，及清潔機身底部的地板。

⊘ **當長期不使用本產品時，應從電源插座上拔出插頭，確保安全。**
否則，可導致觸電或火災等危險。

⊗ **切勿把排出來的水作為飲用或飼養寵物用途。**
所排出的水可能對身體有害。

⊗ **請勿站立或斜靠在機上。**
否則，本機將移動或傾斜翻倒，導致受傷及對機件造成故障。

⊗ **切勿在本機的出風口處放置燃燒產品(如火爐)。**
否則，可影響燃燒產品不能作出正常燃燒。

⊗ **切勿將衣服或任何物品覆蓋出風口和入風口。**
否則，通風受阻，可導致本機發熱或火災等危險。

⊗ **當不使用本機時，請關閉導風板以防止灰塵進入。**
切勿在升高的位置如桌上使用本產品。

⊗ **切勿用水洗滌機身。**
否則，可導致觸電危險。

⊗ **切勿用水噴灑本產品。**
否則可導致觸電、短路或火災等危險。

規 格

本機特點

1. 獨有空氣淨化功能
 - 具有納米銀濾網和除臭活性碳濾網。
 - 本機可同時進行抽濕及空氣淨化，亦可單獨使用空氣淨化功能。
2. 強力乾衣和抽濕功能
 - 本機出風導板為手動控制擺轉方向，最大擺轉範圍可達135°，快速地將熱風送至欲烘乾之衣物。
 - 抽濕力強，循環出風使溫度較高，令吹乾衣物更快速、更有效。
3. 三種操作模式選擇，雙重水位示窗顯示
 - 乾衣、空氣淨化、抽濕三種模式任君選擇。
 - 雙重水位視窗顯示，容易查看水位。
4. 移動方便，容易收藏
 - 纖巧外形設計，附有活動把手，方便提放。
 - 輕巧外型，容易收藏在洗衣房或其它細小的房間內。
5. 自動除霜、保持運作
 - 備有自動除霜功能，確保本機在室溫5℃以上，仍可正常運作。
6. 香薰盒
 - 設置在出風口旁的香薰盒可供您放置喜好的芳香材料，透過出風讓您滿室芳香，或消除疲勞，神清氣爽。

規 格

型號：SS107
 - 微電腦濕度自動控制功能
 - 抽濕能力
 10公升/日（30°C，相對濕度80%)
 - 電源：220~240V，50HZ
 - 自動除霜、水滿自動停機功能
 - 適用環境溫度 5°C~35°C
 - 外形尺寸（厘米）：
 寬 17，深 32.4，高 52.2
 - 重量：8公斤

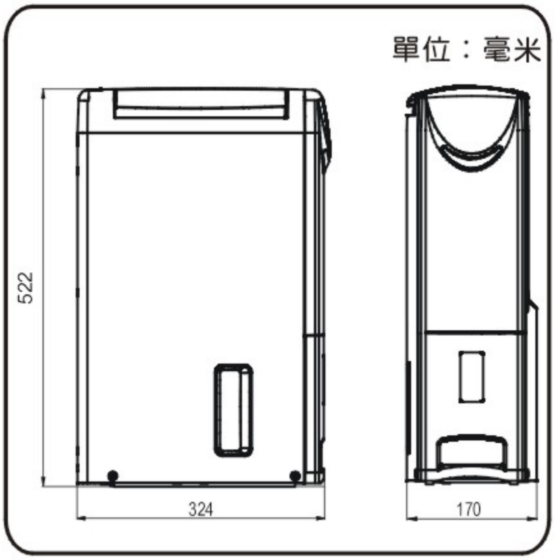

安 裝

1. 將本產品放在平坦穩固的地面上以免出現漏水、噪音等情況。
2. 將本產品與牆壁及其他傢具保持適當距離(見右下圖)。
3. 使用乾衣功能時，衣物應與出風口保持至少40厘米的距離，以免水份滴入機身內，造成故障。

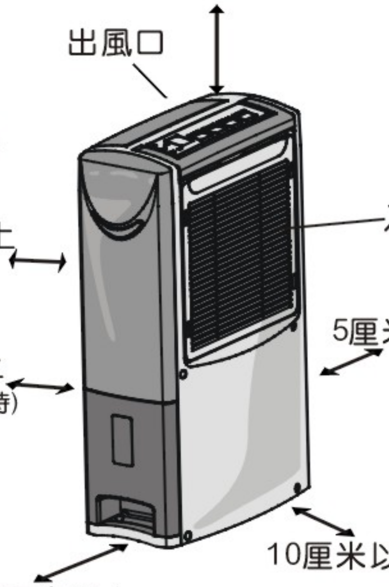

安全操作

切勿讓任何物件掉進機內以免造成故障。

保持適當空間作通風之用。

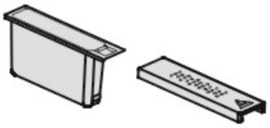

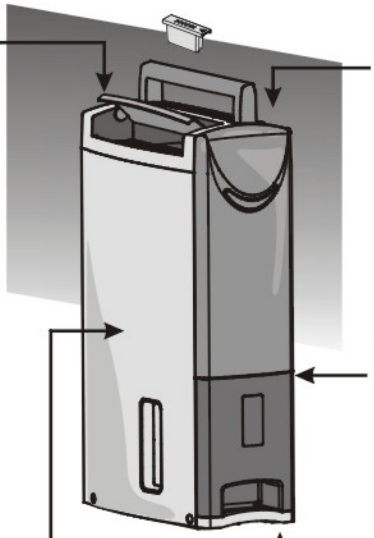

此處香薰盒可取下，裝填芳香材料。若要使用液體香料、精油等，請先取下香薰盒，滴數滴在香薰盒添附的海綿塊上（勿一次加太多，以免溢出），再將香薰盒安裝回機器上。
務必裝牢，以防兒童取玩。
請勿讓小孩單獨接觸香薰盒。

本機運作時，切勿移動水箱，以免造成內部漏水。

水箱必須適當安裝，當水滿或水箱未安裝妥當時，“水滿” 指示燈會亮起，本機將停止操作。

如何操作

使用抽濕機前

1. 安裝納米銀濾網及除臭活性碳濾網。

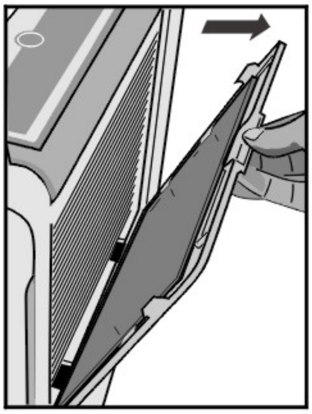

請從機背拉出濾網架

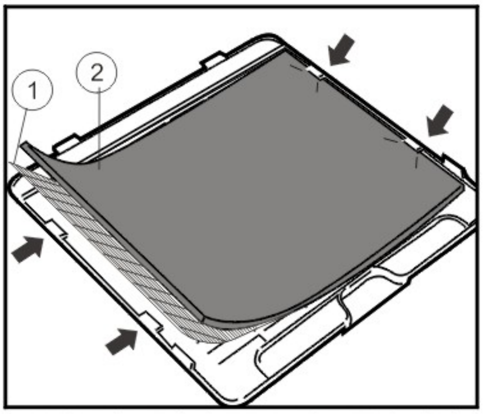

解開納米銀濾網和除臭活性碳濾網包裝後，按照圖示順序，把納米銀濾網(1)和活性碳濾網(2)裝入框架中。

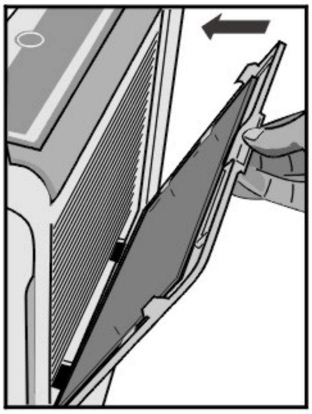

再安回機背上

2. 導風板的打開

機器使用前，請打開導風板，導風板可以調整出風方向向上或者向前。

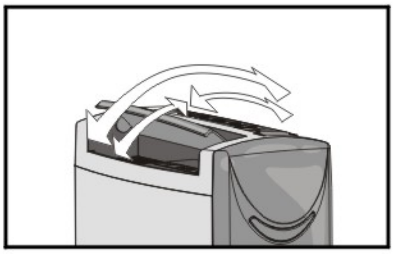

3. 必須正確安裝水箱

當水箱未裝好或水滿時，“水滿”指示燈便會閃動，產品不能運轉。若須連續排水，請在機背安裝水管，詳情請參閱第九頁。

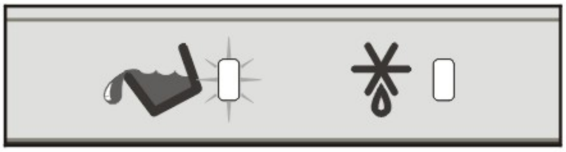

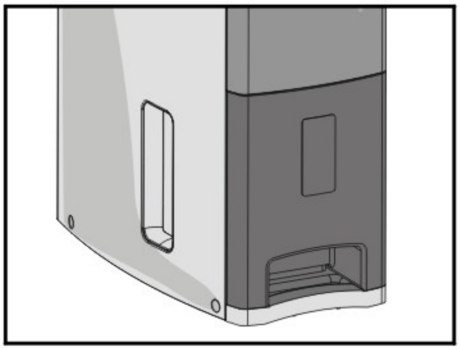

如何操作

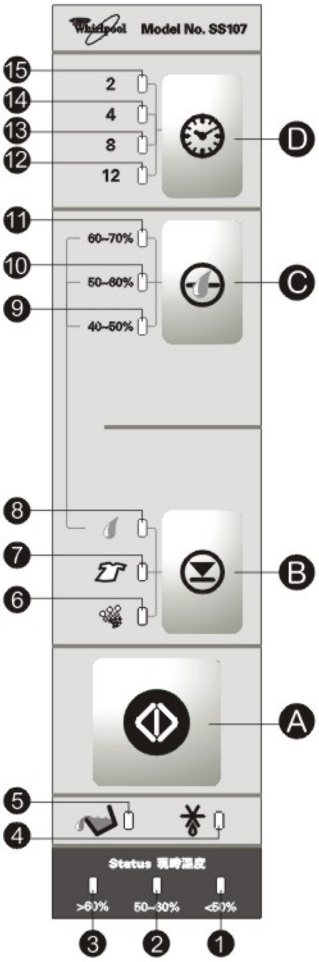

1. 將插頭插入電源插座後，按開/關鍵 🅐，便可啟動本產品。
2. 按功能鍵 🅑，功能指示燈 ❽❼❻ 便順序亮起。
3. 按濕度鍵 🅒，設定濕度範圍，指示燈⓫❿❾便順序亮起。此設定只能在抽濕功能下使用。
4. 按時間掣鍵 🅓，指示燈 ⓯⓮⓭⓬ 便順序亮起，若指示燈未能亮起，表示正進行連續抽濕。
5. 再按開/關鍵 🅐，停止本產品操作。(若長期不使用本產品時，請拔出電源插頭)

注意：本產品具備壓縮機停止3分鐘保護功能。

按鍵功能

🅐 開/關鍵　　🅑 功能鍵

🅒 抽濕鍵　　🅓 時間掣鍵

指示燈狀態：

❶ <50%：目前室內空氣濕度少於<50%。
❷ 50-60%：目前室內空氣濕度約為50-60%。
❸ >60%：目前室內空氣濕度多於>60%。
❹ ：指示燈閃動，表示正在除霜，除霜完畢後，會自動恢復油濕功能。
❺ ：指示燈閃動，表示水箱水滿或未放在正確位置，請倒水或重新放好水箱。
❻ ：指示燈亮起，表示只淨化空氣，並沒有抽濕功能。
❼ ：指示燈亮起，表示提供熱風吹乾衣物。
❽ ：指示燈亮起，表示正在抽濕。
❾ 40-50%：當房間濕度約為40-50%後，便會自動關機。
❿ 50-60%：當房間濕度約為50-60%後，便會自動關機。
⓫ 60-70%：當房間濕度約為60-70%後，便會自動關機。
⓬ 12小時：指示亮起時，表示抽濕機操作12小時後，便會自動關機。
⓭ 8小時：指示亮起時，表示抽濕機操作8小時後，便會自動關機。
⓮ 4小時：指示亮起時，表示抽濕機操作4小時後，便會自動關機。
⓯ 2小時：指示亮起時，表示抽濕機操作2小時後，便會自動關機。

使用注意事項

水箱倒水

1. 當水箱滿水時，水滿指示燈便會閃動，本機將停止操作。
2. 拉出水箱時，要保持平衡並提起水箱。
3. 每次倒水後，請用清水沖洗乾淨，並將水箱推回機背。
4. 當機件運轉或剛停止運轉時，切勿移動水箱，以免機件內部漏水。
5. 切勿移動及破壞水箱浮標，否則本機將無法正常運作。
6. 若水箱未穩當裝回，水滿指示燈會亮起示警。

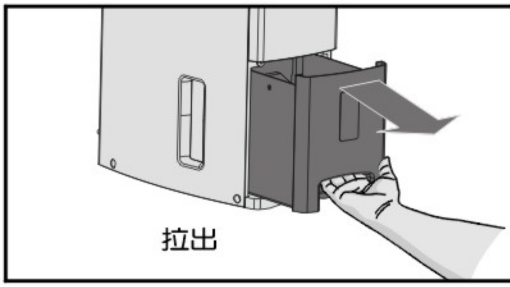

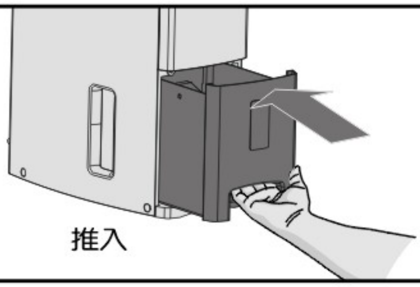

連續排水

若環境適合連續排水，可安裝直徑11.5-12毫米的水管。

1. 用螺絲刀拆開機背預留的出水孔，再用水管接上出水口。
2. 排水管的排水端，需成斜度下垂，切勿扭曲，否則無法順利排水。

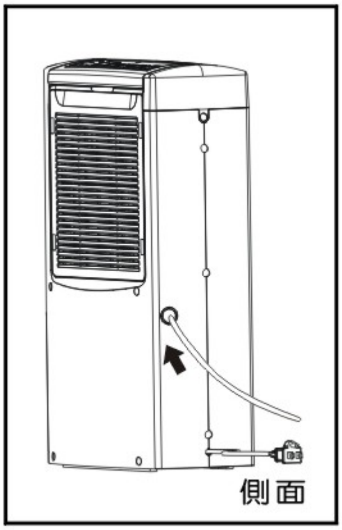

移動除濕機

1. 請使用把手及滾輪，移動本產品。移動時須保持直立方向，不可橫臥移動。
2. 移動本產品前，請先關機，然後拔下電源插頭，並倒空水箱內的水。
3. 操作本機前，請確保水箱安放妥當。